Regulator Automation

TC5044-MK4 UNIVERSAL CONTROLLER

TEMPERATURE HUMIDITY PRESSURE CARBON MONOXIDE & CARBON DIOXIDE & TIME SCHEDULING

DESCRIPTION

The TC5044 is a programmable controller that does not need to be programmed. It has preprogrammed blocks for temperature, humidity, pressure, flow, CO & CO2. It is designed to be a replacement / upgrade for the ET45 and TC2000 range.

The TC5044 MK4 has 40+ pre-programmed function blocks. It is only necessary to scroll through the functions and select one. The controller is then programmed. The default program (001) is 2 Stage Reverse Cycle. This is also used for 1 Stage Reverse Cycle. Any parameter of the program can also be changed, eg: proportional bands, relay on and off points, PWM rates, PI & PID functions, etc.

Inbuilt Timeclock with User Friendly programmable 7 day time schedule and programmable holidays (default holidays pre-programmed).

The Timeclock can be enabled on any menu function with the ability of programming the 4 relays and 3 analogue outputs independently. It can also operate as a stand alone Timeclock.

The controller is housed in a 4 DIN module 70 x 88 x 62 mm enclosure. It comes with its own DIN rail mount or can be mounted on a standard 35mm DIN mounting rail. The TC5044 controller has a 2 x 16 character LCD display with white backlighting, 4 x blue relay status LED's and 3 pushbuttons for INCREASE, DECREASE & SELECT.

The controller will operate with 1K, 2K and 10K NTC thermistor sensors and existing Regulator setpoints. It will also operate with PTC 1K Nickel and 1K Platinum sensors. The default is the 10K thermistor sensor. Up to 4 Smart Sensors can be connected to the controller.

The controller will accept 2 or 3 wire 4 – 20mA / 0-10VDC inputs for Temperature, Humidity, Pressure, Flow, CO and CO2.

There are 3 analogue outputs plus one diode protected output of AO3. The analogue outputs are short circuit proof for low voltages. They will even protect against 24vac connected to them. The output will open circuit under fault conditions and will reset when the fault is removed.

There are 4 relay outputs, Relay 1 is a SPCO contact and Relays 2, 3 & 4 are SPNO contacts. The relays are rated at 5A 250VAC.

The power supply will operate over the range of 18 – 265V AC/DC. It can power CO2 sensors and other sensors requiring an external 24VDC power supply. The 24VDC output is available from terminal 1 when operating from a 2 wire 4-20mA or 3 wire 0-10vdc transducer. It can also power small damper and valve actuators directly without requiring an external 24VAC transformer, from Terminal 5.

TC5044-MK4 UNIVERSAL CONTROLLER

LCD DISPLAY

This is a 2 x 16 character LCD display with white backlighting. The top line will display the Temperature / Humidity / Pressure / Flow / CO or CO2. This line will remain permanently displayed in normal mode. The second line displays the setpoint. This can be adjusted by pressing the Select Button and using the Raise / Lower buttons to change the setpoint. Temperature is adjustable in 0.5 C increments. A third line displays the three analogue outputs.

SMART SENSORS

All the Smart Sensors will operate from the controller. Power and Comms are supplied over a 2 wire non-polarised connection. Up to four smart sensors can be connected to the controller. The controller will recognise how many are connected and will average the sensors. One of the sensors can be a display type TR3840. When the TR3840 Smart Sensor with setpoint is connected, the TC5044 setpoint can be used to over ride the TR3840 setpoint to operate heating or cooling. This setpoint over ride will default back to the TR3840 setpoint after ten minutes.

CONFIGURATION MENU

The TC5044 Controller can be configured for many different modes of operation. The standard programs are listed in the table below. To select a program, hold the Select button for ten seconds. Using the Increase / Decrease buttons, step through to the program you require. Press the Select button twice, scroll down to save and exit. The standard programmes can be altered for different applications. Refer to the TC5044 Instruction Manual for guidance in changing parameters.

	TEMPERATURE
001	2 Heat, 2 Cool – Rev.Cyc, 1 Heat – On/Off
002	3 Heat, 3 Cool – Reverse Cycle
003	4 Heat – On/Off
004	3 stage On/Off heat & 1 stage cool
005	2 Heat, 2 Cool – On/Off
006	1 stage On/Off heat & 3 stage cool
007	4 Cool – On/Off
008	4 stage time proportional heat control
009	3 stage time proportional heat & 1 stage control
010	2 stage time proportional heat & 2 stage control
011	1 Heat – Time Prop, 3 Cool – On/Off
012	2 Heat, 1 Cool – On/Off, Thermal Valve Cool PWM
013	1 Heat, 1 Cool – On/Off, T/V Heat, T/V Cool PWM
014	High Temperature Range. -50°C to 500°C
019	Temperature setback
	FAN CONTROL
025	2 Heat, 2 Cool – Rev.Cyc, Fan Control
026	1 Heat, 2Cool – On/Off, Fan Control
	Note: Time Delays on Compressors are 6 Minutes Start to Start. 2 Minutes Stop to Start.
	O/A ECONOMY CYCLE & DUAL TEMPERATURE
033	Diff O/A Hi Limit Temp Smart Sensors R/A Control
036	Diff O/A Hi Limit Enthalpy Smart Sensors R/A Control
037	2 zone 1 stage heat pump and Econ. cycle.
038	2 Zone x 1 Heat On/Off & 1 Cool On/Off
039	Dual Zone Differential Control of Supply Air
	TEMPERATURE & HUMIDITY
041	2 Heat, 2 Cool – Rev.Cyc, 1 De-Humid On/Off
042	1 Heat 2 Cool On/Off 1 De-Humid On/Off
043	1 Heat 1 Cool On/Off 1 Humid 1 De-Humid On/Off

	HUMIDITY
051	Humidity 0-100% 2 R/A 2 D/A On/Off
053	Absolute Humidity
	PRESSURE
061	Pressure 0 – 25 Pa, 2 R/A, 2D/A – On/Off
062	Pressure 0 – 50 Pa, 2 R/A, 2D/A – On/Off
063	Pressure 0 –100 Pa, 2 R/A, 2D/A – On/Off
064	Pressure 0 – 250 Pa, 2 R/A, 2D/A – On/Off
065	Pressure 0 - 500 Pa, 2 R/A, 2D/A – On/Off
066	Pressure 0 – 1000 Pa, 2 R/A, 2D/A – On/Off
067	Pressure 0 – 400 KPa, 2 R/A, 2D/A – On/Off
068	Pressure 0 – 1000 KPa, 2 R/A, 2D/A – On/Off
069	Pressure 0 – 3000 KPa, 2 R/A, 2D/A – On/Off
	VOLTAGE RELAY
081	Relay Module 4 Stage
	CO CARBON MONOXIDE
091	Gas CO 0 – 100 ppm, 2 R/A, 2D/A – On/Off
092	Gas CO 0 – 200 ppm, 2 R/A, 2D/A – On/Off
093	Gas CO 0 – 300 ppm, 2 R/A , 2 D/A – On/Off
096	Gas CO 0 - 100ppm and Temperature
	CO2 CARBON DIOXIDE
101	Gas CO2 0 – 2000 ppm, 2 R/A, 2D/A – On/Off
	REFRIGERANT GASES
111	R22 0 – 2000 ppm, 2 R/A, 2 D/A – On/Off
112	R134a 0 – 2000 ppm, 2 R/A, 2 D/A – On/Off
113	R410a 0 – 2000 ppm, 2 R/A, 2 D/A – On/Off
	2 X FAN AND 1 STAGE COOL DUTY CHANGE OVER
121	Duty Standby
	FACTORY RESET
	EXIT

CONNECTION DIAGRAMS

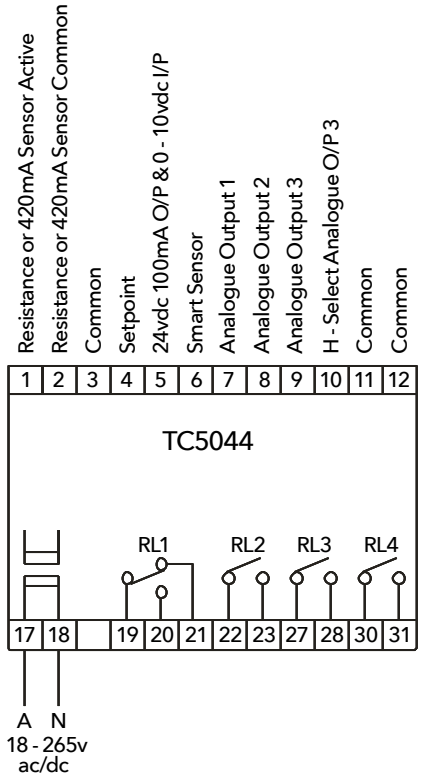

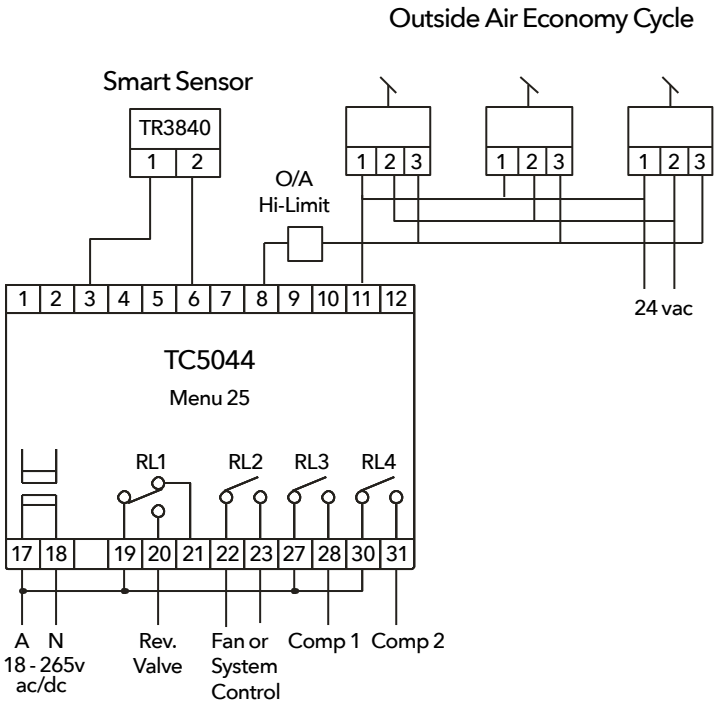

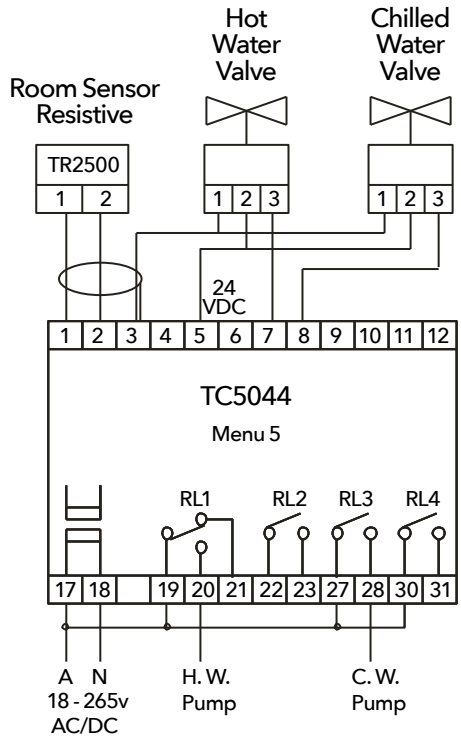

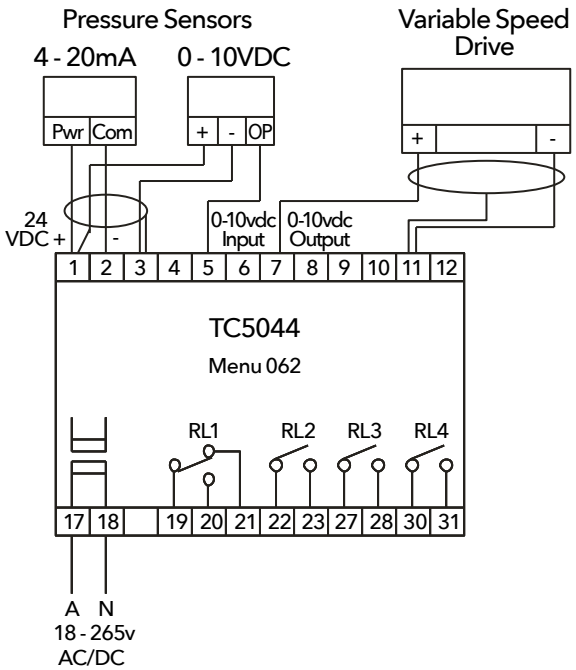

TC5044-MK4 UNIVERSAL CONTROLLER

TECHNICAL DATA

Supply Voltage	18 - 265V AC/DC
Power Consumption	2W nominal – up to 5W with external load.
Model	TC5044-MK4
Ambient Temp Operation	0 – 50˚C
Ambient Humidity	Max 90%RH
Dimensions	L70 x H88 x D62mm
Weight	0.40Kg
Wiring Terminal Size	4.0mm^2
Inputs – Resistive Sensors **Active Sensors** **4 – 20 mA Sensors**	Thermistor 1K, 2K, 10K, Ni 1000R, Pt 1000R Smart Sensors TR3800, TR3840 & TR3700 (Temp & Humid) Humidity, Pressure, Flow, Carbon Monoxide & Carbon Dioxide
Analogue Outputs	AO1, AO2 & AO3 0 – 10 vdc 10 mA. Short Circuit Protected AO4 – Diode protected output of AO3
Relay Outputs	RL1 SPCO RL2, RL3 & RL4 SPNO 250 VAC 5 A Resistive
24VDC Power Supply	Output Current 100mA
Microcontroller	Freescale Semiconductor (Motorola) 32 bit microprocessor, 56K Flash Memory, 8 Channel 12 Bit A/D Converter.

8 Hope St, Melrose Park, NSW 2114
(02) 9804 6366 | sales@regulatoraustralia.com.au
regulatoraustralia.com.au

© Copyright Regulator Australia Pty Ltd. Due to our policy of continuous striving towards manufacturing excellence and design development, we reserve the right to change details or specifications without notice. While every effort is made to ensure accuracy at the time of publication, we shall not be held liable for any errors or omissions, implied or otherwise.

November 2018

Regulator Automation