SIEMENS

3181

RDG100
RDG110
RDG110U

RDG100T
RDG160T
RDG160TU

RDG100T/H

Wall-mounted room thermostats with LCD RDG1..

for fan coil unit applications

for universal applications

for use with compressors in DX-type equipment

- **RDG100..: Operating voltage AC 230 V, On/Off, 3-positon or PWM control outputs**
- **RDG110: Operating voltage AC 230 V, On/Off relay (SPDT) outputs**
- **RDG110U: Operating voltage AC/DC 24 V, On/Off relay (SPDT) outputs**
- **RDG100../RDG110..: Output for 1-speed and 3-speed**
- **RDG160T..: Operating voltage AC/DC 24 V, DC 0…10 V or On/Off control outputs**
- **RDG160T..: Output for 1-speed, 3-speed or ECM fan DC 0...10 V**
- **Operating modes: Comfort, Economy and Protection**
- **Automatic or manual fan speed**
- **3 multifunctional inputs for keycard contact, external sensor, etc**
- **Automatic or manual heating/cooling changeover**
- **Adjustable commissioning and control parameters**
- **Minimum and maximum setpoint limitation**
- **Backlit display**

Additional features of RDG100T, RDG160T.., RDG100T/H:

- **Infrared remote control receiver**
- **Auto Timer mode with 8 programmable timers**
- **Auto timer can be disabled via P02**
- **Auto timer can be disabled via DIP switches (RDG160T..)**
- **Landscape design (RDG100T/H only)**
- **Selectable relay output functions (RDG160T..)**

The RDG1.. room thermostats are designed for use with the following types of system:

Fan coil units via On/Off or modulating control outputs:
- 2-pipe system
- 2-pipe system with electric heater
- 2-pipe system and radiator/floor heating
- 4-pipe system
- 4-pipe system with electric heater
- 2-stage heating or cooling system

Chilled/heated ceilings (or radiators) via On/Off or modulating control outputs:
- Chilled/heated ceiling
- Chilled/heated ceiling with electric heater
- Chilled/heated ceiling and radiator/floor heating
- Chilled/heated ceiling, 2-stage cooling or heating

Heat pumps with dx-type equipment:
- 1-stage compressor for heating or cooling
- 1-stage compressor for heating or cooling with electric heater
- 1-stage compressor for heating or cooling and radiator/floor heating
- 1-stage compressor for heating and cooling
- 1-stage compressor for heating and cooling with reversing valve
- 2-stage compressor for heating or cooling

- Maintenance of room temperature via built-in temperature sensor or external room temperature/return air temperature sensor
- Automatic or manual changeover between heating and cooling mode
- Selection of applications via DIP switches
- Selection of operating mode via the operating mode button on the thermostat
- 1-speed, 3-speed or DC 0…10 V fan control (automatic or manual)
- Display of current room temperature or setpoint in °C and/or °F
- Minimum and maximum setpoint limitation
- Button lock (automatic or manual)
- 1 digital input, freely selectable for:
  - Operating mode switchover contact (keycard)
  - Automatic heating/cooling changeover contact
  - Electric heater enable
  - Dewpoint sensor
  - Fault input
- 2 multifunctional inputs, freely selectable for:
  - Operating mode switchover contact (keycard)
  - Automatic heating/cooling changeover sensor
  - External room temperature or return air temperature
  - Dewpoint sensor
  - Electric heater enable
  - Fault input
  - Supply air temperature sensor (RDG160T..)
- Advanced fan control function, i.e. fan kick, fan start, selectable fan operation (enable, disable or depending on heating or cooling mode)
- Purge function together with 2-port valve in a 2-pipe changeover system
- Reminder to clean filters
- Floor heating temperature limit
- Minimum and maximum supply air temperature limitation (RDG160T..)
- Reloading factory settings for commissioning and control parameters
- 7-day time program: 8 programmable timers to switch over between Comfort and Economy mode (RDG100T, RDG160T.., RDG100T/H)
- Infrared remote control (RDG100T, RDG160T.., RDG100T/H)
- Selectable relay function (RDG160T..)
  - For switching OFF external equipment OFF during Protection mode
  - For switching ON external equipment (such as. pump) during H/C demand
  - Output heating/cooling sequence
- Wizard function to select working temperature unit °C or °F (RDG160TU, RDG110U)

Applications

The room thermostats support the following applications, which can be configured via DIP switches at the rear of the unit. Depending on the thermostat type, On/Off or modulating control outputs are available.

Applications, DIP setting, Control outputs

- 2-pipe fan coil unit

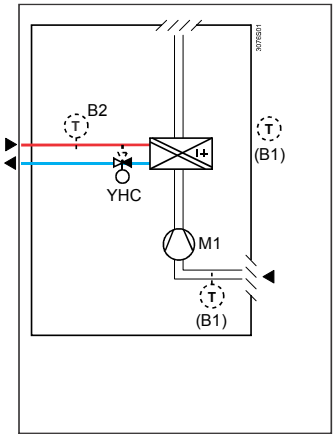

Using RDG100../RDG110../RDG160T..

- 2-pipe fan coil unit and electric heater

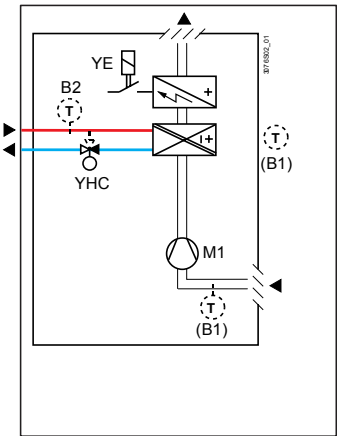

Using RDG100../RDG110../RDG160T..

- 2-pipe fan coil unit and radiator/floor heating

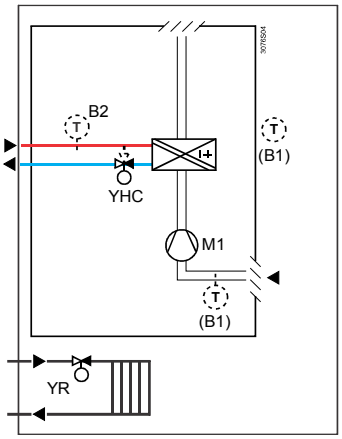

Using RDG100../RDG110../RDG160T..

- 2-pipe/2-stage fan coil unit

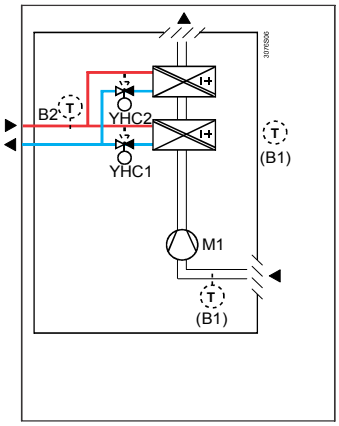

Using RDG100../RDG110../RDG160T..

- 4-pipe fan coil unit

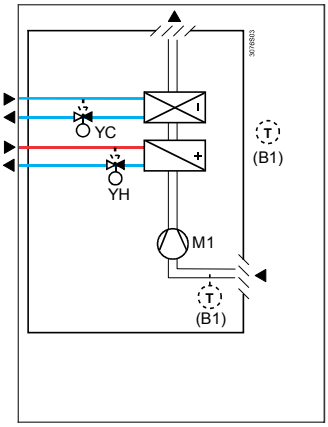

Using RDG100../RDG110../RDG160T..

- 4-pipe fan coil unit and electric heater

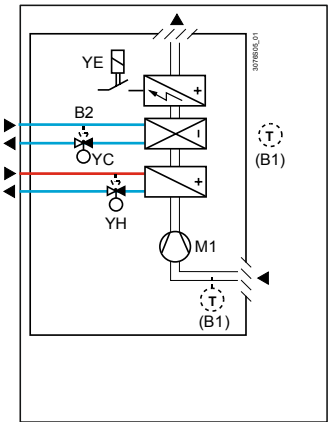

Using RDG100..

Product no.	Control outputs	Fan
RDG100..	On/Off, PWM, 3-position	3-speed, 1-speed
RDG110/RDG110U	On/Off (SPDT)	3-speed, 1-speed
RDG160T/RDG160TU	DC 0...10 V	3-speed, 1-speed
	On/Off, DC 0...10 V	DC 0...10 V ECM

Applications, DIP setting, Control outputs

- Chilled/heated ceiling

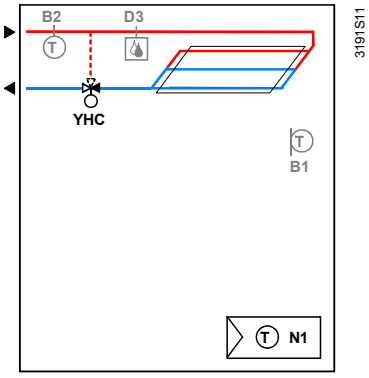

Using RDG100../RDG110../RDG160T..

- Chilled/heated ceiling and electric heater

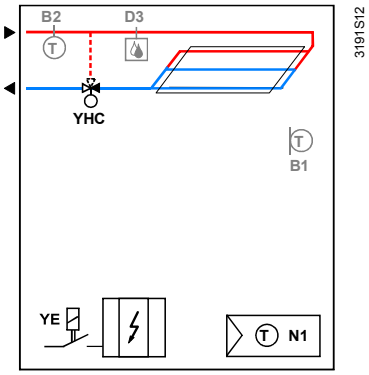

Using RDG100../RDG110../RDG160T..

- Chilled/heated ceiling and radiator /floor heating

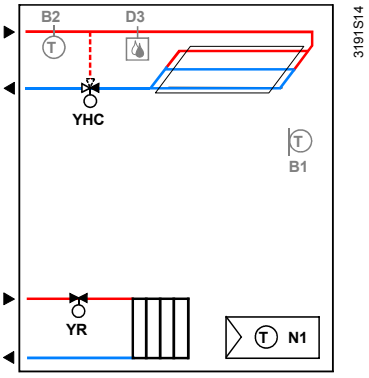

Using RDG100../RDG110../RDG160T..

- 2-stage chilled/ heated ceiling

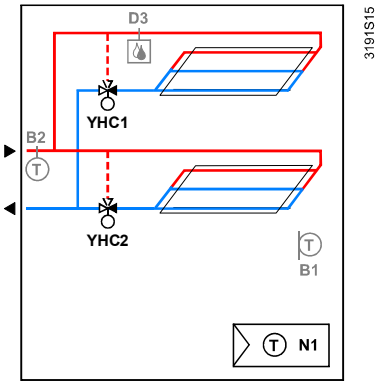

Using RDG100../RDG110../RDG160T..

- Chilled ceiling and radiator

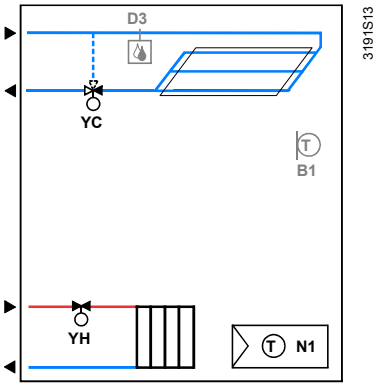

Using RDG100../RDG110../RDG160T..

Product no.	Control outputs
RDG100..	On/Off, PWM, 3-position
RDG110/RDG110U	On/Off (SPDT)
RDG160T/RDG160TU	On/Off, DC 0...10 V

Applications, DIP setting, Control outputs

- Heated or cooled with compressors

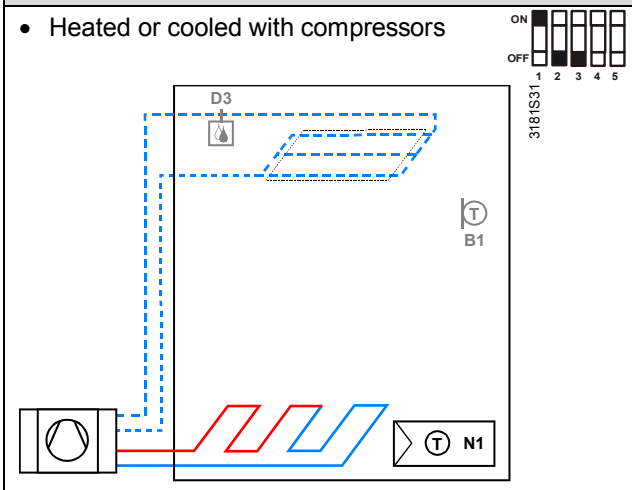

Using RDG110../RDG160T..

- Heated or cooled with compressors with electric heater

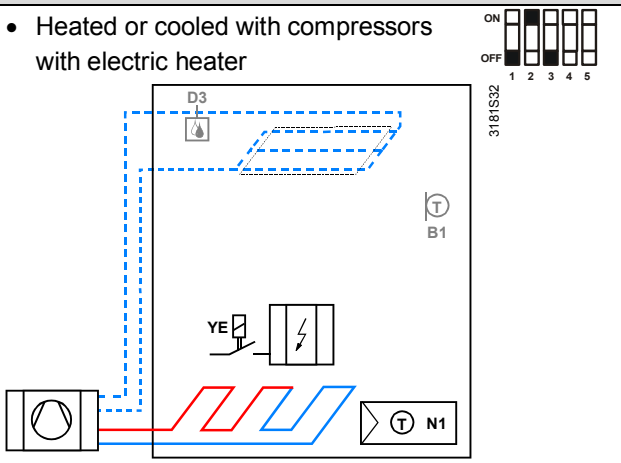

Using RDG110../RDG160T..

- Heated and cooled with compressors

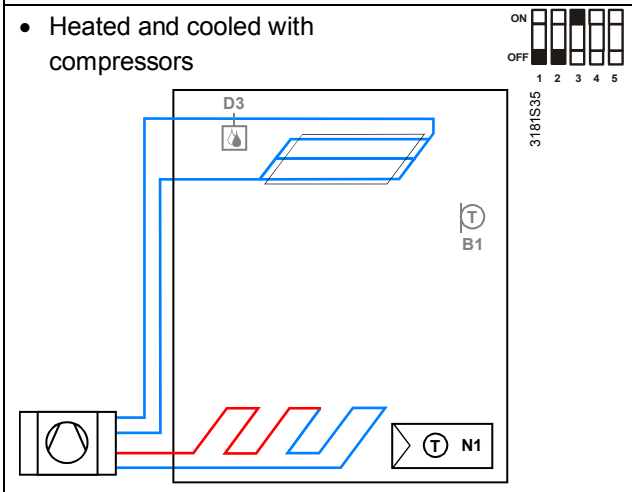

Using RDG110../RDG160T..

- 2-stage heated or cooled with compressors

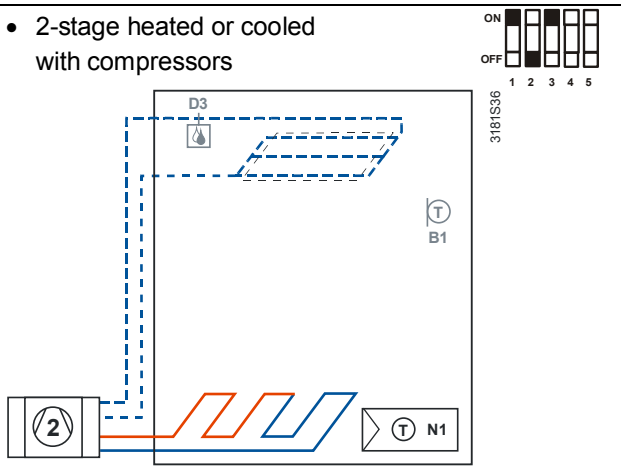

Using RDG110../RDG160T..

Product no.	Control outputs	Fan
RDG110/RDG110U	On/Off (SPDT)	Disabled, 3-speed, 1-speed
RDG160T/RDG160TU	On/Off, DC 0...10 V	Disabled, 3-speed, 1-speed, DC 0...10 V

Legend

	YHC..	Heating/cooling valve actuator	M1	1-speed or 3-speed fan
	YH	Heating valve actuator	B1	Return air temperature sensor or external room temperature sensor (optional)
	YC	Cooling valve actuator		
	YE	Electric heater	B2	Changeover sensor (optional)

Type summary

Product no.	Features										UL
	Operating voltage	Number of control outputs				Time program	Backlit LCD	Infrared receiver [1]	Fan		
		ON/ OFF	PWM	3-pos	DC 0..10 V				ECM [2]	3-speed	
RDG100	AC 230 V	**3** [3]	**2** [3]	**2** [3]			✓			✓	
RDG100T	AC 230 V	**3** [3]	**2** [3]	**2** [3]		(✓) [5]	✓	✓		✓	
RDG100T/H	AC 230 V	**3** [3]	**2** [3]	**2** [3]		(✓) [5]	✓	✓		✓	
RDG110	AC 230 V	**2** [4]					✓			✓	
RDG110U	AC/DC 24 V	**2** [4]					✓			✓	✓
RDG160T	AC/DC 24 V				**2**	(✓) [5]	✓	✓		✓	
		2 [6]			**2** [6]	(✓) [5]	✓	✓	✓		
RDG160TU	AC/DC 24 V				**2**	(✓) [5]	✓	✓		✓	✓
		2 [6]			**2** [6]	(✓) [5]	✓	✓	✓		

1) Infrared remote control must be ordered as a separate item

2) ECM fan output DC 0…10 V

3) On/Off, PWM or 3-position (triac outputs)

4) Relay output (SPDT)

5) Can be disabled via P02 (or via DIP switches on RDG160T..)

6) On/Off (relay output) or DC control signal

Equipment combinations

	Description	Product no.	Data Sheet
	Infrared remote control 	**IRA211**	3059
	Cable temperature sensor or changeover sensor, cable length 2.5 m (8 feet) NTC (3 kΩ at 25 °C (77 °F)) 	**QAH11.1**	1840
	Room temperature sensor NTC (3 kΩ at 25 °C (77 °F)) 	**QAA32**	1747
	Cable temperature sensor, cable length 4 m (13 feet) NTC (3 kΩ at 25 °C (77 °F)) 	**QAP1030/UFH**	1854
	Condensation monitor 	**QXA2601/ QXA2602/ QXA2603/ QXA2604**	3302
On/Off actuators	Electromotoric On/Off valve and actuator (only available in AP, UAE, SA and IN) 	**MVI../MXI..**	4867
	Electromotoric On/Off actuator 	**SFA21..**	4863
	Zone valve actuators (only available in AP, UAE, SA and IN) 	**SUA..**	4830
On/Off and PWM actuators [*]	Thermal actuator (for radiator valves) AC 230 V, NO 	**STA23..**	4884
	Thermal actuator (for radiator valves) AC 24 V, NO 	**STA73..** [*]	4884 [*]

	Thermal actuator AC 230 V (for small valves 2.5 mm (0.1")), NC	**STP23..** *)	4884
	Thermal actuator AC 24 V (for small valves 2.5 mm (0.1")) NC	**STP73..** *)	4884 *)
3-position actuators	Electrical actuator, 3-position (for radiator valves)	**SSA31..**	4893
	Electrical actuator, 3-position (for 2- and 3-port valves/V..P45)	**SSC31..**	4895
	Electrical actuator, 3-position (for small valves 2.5 mm (0.1"))	**SSP31..**	4864
	Electrical actuator, 3-position (for small valves 5.5 mm (0.2"))	**SSB31..**	4891
	Electrical actuator, 3-position (for CombiValves VPI45)	**SSD31..**	4861
	Electromotoric actuator, 3-position (for valves 5.5 mm)	**SQS35..**	4573
DC 0…10 V actuators	Electrical actuator, DC 0...10 V (for radiator valves)	**SSA61..**	4893
	Electrical actuator, DC 0...10 V (for 2- and 3-port valves/V..P45)	**SSC61..**	4895
	Electrical actuator, DC 0...10 V (for small valves 2.5 mm (0.1"))	**SSP61..**	4864
	Electrical actuator, DC 0...10 V (for small valves 5.5 mm (0.2"))	**SSB61..**	4891
	Electrical actuator, DC 0...10 V (for CombiValves VPI45)	**SSD61..**	4861
	Electromotoric actuator, DC 0…10 V (for valves 5.5 mm (0.2"))	**SQS65..**	4573
	Electrothermal actuator, AC 24 V, NC, DC 0…10 V, 2 m (6.6 feet) (for radiator valves and small valves 2.5 mm (0.1"))	**STA63**	4884
	Electrothermal actuator, AC 24 V, NO, DC 0…10 V, 2 m (6.6 feet) (for radiator valves and small valves 2.5 mm (0.1"))	**STP63**	4884

*) With PWM control, it is not possible to ensure exact parallel running of 2 or more thermal actuators. If several fan coil systems are controlled by the same room thermostat, preference should be given to motorized actuators with On/Off or 3-position control.

Note For more information about parallel operation and the maximum number of actuators that can be used, refer to the Data Sheets of the selected type of actuator and the following list:

Maximum number of actuators in parallel on the RDG100..:
- 6 SS..31.. actuators (3-pos)
- 4 ST..23.. if used with On/Off control signal
- 10 SFA.., SUA.., MVI.., MXI.. On/Off actuators
- Parallel operation of SQS35 is not available

Maximum number of actuators in parallel on the RDG110..:
- 10 On/Off actuators

Maximum number of actuators in parallel on the RDG160T..:
- 10 SS..61.. actuators (DC)
- 10 ST..23/63/73.. actuators (DC or On/Off)
- 10 SFA.., SUA.., MVI.., MXI.. On/Off actuators
- 10 SQS65.. actuators (DC)

Accessories

Description	Product no.	Data Sheet
Changeover mounting kit (50 pcs/package)	ARG86.3	3009

Ordering

Product no.	Stock no.	Designation
RDG100	S55770-T158	Room thermostat
RDG100T	S55770-T159	Room thermostat, with timer
RDG100T/H	S55770-T235	Room thermostat, with timer, landscape housing
RDG110	S55770-T160	Room thermostat with relay outputs (AC 230 V)
RDG110U	S55770-T361	Room thermostat with relay outputs (AC 24 V), UL certified
RDG160T	S55770-T343	Room thermostat with timer and DC (or On/Off) output for valve and fan (AC 24 V)
RDG160TU	S55770-T362	Room thermostat with timer and DC (or On/Off) output for valve and fan (AC 24 V), UL certified

Order the **IRA211** infrared remote control separately.

Order valve actuators separately.

Order RDG110U and RDG160TU from BT US.

Mechanical design

The room thermostat consists of two parts:

- Plastic housing which accommodates the electronics, the operating elements and the room temperature sensor
- Mounting plate with the screw terminals

The housing engages in the mounting plate and is secured with 2 screws.

Operation and settings

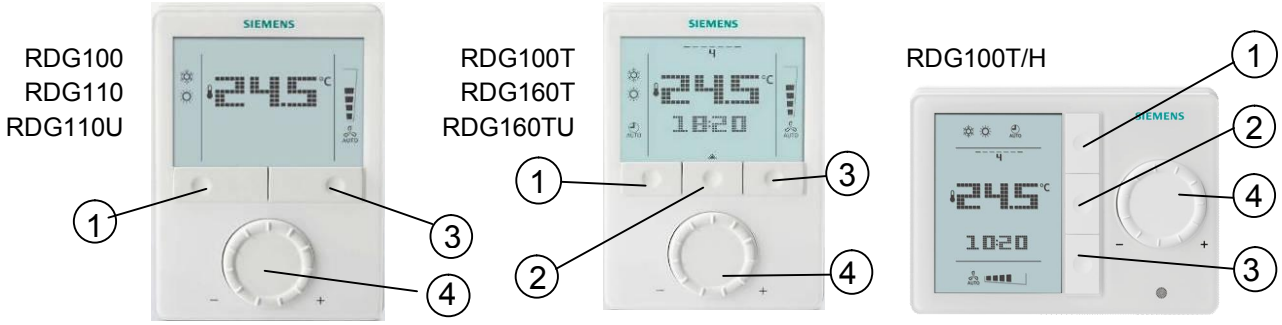

1 Operating mode selector/Esc
2 Button to enter the time and to set the timers
3 Fan mode selector/OK
4 Rotary knob for setpoint and parameter adjustment

Display

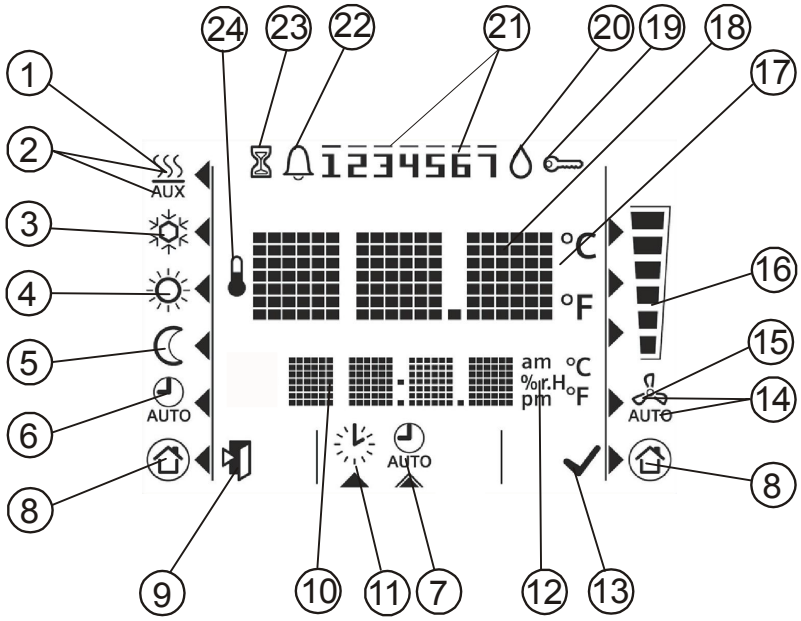

#	Symbol	Description	#	Symbol	Description
1		Heating mode	14	AUTO	Automatic fan
2	AUX	Heating mode auxiliary heater on (2nd stage)	15		Manual fan
3		Cooling mode	16		Fan speed: Fan speed 1
4		Comfort mode			Fan speed: Fan speed 2
5		Economy mode			Fan speed: Fan speed 3
6	AUTO	Auto Timer mode	17	°C °F	Degrees Celsius Degrees Fahrenheit
7		View and set Auto Timer program			
8		Protection	18		Digits for room temperature and setpoint display
9		Escape	19		Button lock
10	am pm	Digits for time, room temperature, setpoint, etc.	20		Condensation in room (dewpoint sensor active)
11		Setting the time of day and the weekday	21	1234567	Weekday 1…7: 1 = Monday/7 = Sunday
12	am pm	Morning: 12-hour format Afternoon: 12-hour format	22		Fault
			23		Temporary timer function (visible when operating mode is temporarily extended due to prolonged presence or absence)
13		Confirmation of parameters	24		Indicates that room temperature is displayed

Do not mount on a wall in niches or bookshelves, behind curtains, above or near heat sources, or exposed to direct solar radiation. Mount about 1.5 m (5 feet) above the floor.

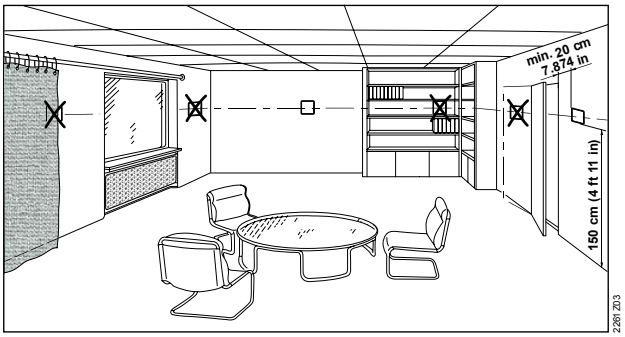

Mounting

- The room thermostat must be mounted in a clean, dry indoor place and must not be exposed to drip or splash water.

Wiring

See Mounting Instructions (M3181, M3183, M3183.1 or M3183.2) enclosed with the thermostat.

- Comply with local regulations to wire, protect and earth the thermostat.

Warning!
No internal line protection for supply lines to external consumers (Q1, Q2, Q3, Yx or Yxx).
Risk of fire and injury due to short-circuits!

- Adapt the line diameters as per local regulations to the rated value of the installed overcurrent protection device.
- The AC 230 V mains or AC 24 V supply line must have a circuit breaker with a rated current of no more than 10 A. For AC 24 V US installations, use Class 2 rated power supplies.

- Properly size the cables to the thermostat, fan and valve actuators for AC 230 V mains voltage.
- Use only valve actuators rated for AC 230 V on RDG100.., RDG110 and on RDG160T if AC 230V is connected to the "L" terminal.
- Use only 3-speed fan rated with AC 24 V on RDG160TU.
- Isolate the cables of inputs X1-M/X2-M and D1-GND if the conduit box carries AC 230 V mains voltage.
- On the RDG100.. and RDG110, inputs X1-M and X2-M carry mains potential. If the sensor's cables are extended, they must be suited for mains voltage.
- Inputs X1-M, X2-M or D1-GND of different units (e.g. summer/winter switch) may be connected in parallel with an external switch. Consider overall maximum contact sensing current for switch rating.
- Selectable relay function (RDG160T..). Consider overall maximum current though the relays.
- Disconnect power supply before removing the thermostat from the mounting plate!

Commissioning

1. Select the application via the DIP switches at the rear of thermostat before fitting the front housing to the mounting plate.
2. Power up the thermostat after successfully connecting the line power. The thermostat starts to reset and all LCD segments flash, indicating that the reset was correct.

After the reset, which takes about 3 seconds, the thermostat is ready for commissioning by qualified HVAC staff. The control parameters of the thermostat can be set to ensure optimum performance of the entire system (see Basic Documentation P3181).

Temperature unit selection wizard (only for RDG110U and RDG160TU)

The temperature unit selection wizard enables to select the preferable temperature unit display on thermostat between °C and °F.

1. Rotate rotary knob to select the preferable temperature unit.
2. Press the button ✓ (OK) to confirm the selection, and the thermostat goes to normal operating page.

Notes

- Pressing button (Esc) does not confirm the temperature unit selection.
- If the temperature unit is not selected, °C is used by default.

Control sequence

- The control sequence may need to be set via parameter P01 depending on the application. The factory setting for the 2-pipe application is "Cooling only"; and "Heating and cooling" for the 4-pipe application.

Compressor-based application ⚠

- When the thermostat is used in connection with a compressor, the minimum output on-time (parameter P48) and off-time (parameter P49) for Y11/Y21 (RDG110) must be adjusted to avoid damage to the compressor and shortening its life.

Calibrate sensor

- Recalibrate the temperature sensor via parameter P05 if the room temperature displays on the thermostat does not match the room temperature measured.

Adaptive temperature compensation for el. heating

- If an electric heater is directly connected to output Y21, the load current of the electric heater should be indicated in parameter P46. (RDG110, Index D and higher only). Default setting: 1 A for loads up to 1 A.

Setpoint and setpoint range limitation

- We recommend to review the setpoints and setpoint ranges (parameters P08…P12) and change them as needed to achieve maximum comfort and save energy.

Disposal

The devices are considered electronics devices for disposal in terms of European Directive 2012/19/EU and may not be disposed of as domestic waste.

- Dispose of the device via the channels provided for this purpose.
- Comply with all local and currently applicable laws and regulations.

RDG100../RDG110

⚠ Power supply	Rated voltage		AC 230 V
	Frequency		50/60 Hz
	Power consumption	RDG100..	Max. 8 VA/1 W
		RDG110	Max. 12 VA/2 W
	No internal fuse. External preliminary protection with max. C 10 A circuit breaker required in all cases.		
Outputs	Fan control Q1, Q2, Q3-N		AC 230 V
	Rating min, max resistive (inductive)		AC 5 mA…5(4) A
STOP Note!	**Fans must NOT be connected in parallel!** Connect one fan directly, for additional fans, one relay for each speed.		
	Control outputs		
	Y1, Y2, Y3, Y4-N	RDG100..	AC 230 V, AC 8 mA…1 A
	Power limitation		3 A fast microfuse, cannot be exchanged
	Y11-N/Y21-N (NO)	RDG110	AC 230 V, AC 5 mA…5(3) A
	No internal fuse. External preliminary protection with max. C 10 A circuit breaker in the supply line required under all circumstances.		
Inputs	Multifunctional inputs		
	X1-M/X2-M		
	Temperature sensor input		
	Type		NTC (3 kΩ at 25 °C)
	Temperature range		0...49 °C
	Cable length		Max. 80 m
	Digital input		
	Operating action		Selectable (NO/NC)
	Contact sensing		DC 0…5 V, max. 5 mA
	Parallel connection of several thermostats for one switch		Max. 20 thermostats per switch. **Do not mix with D1!**
	Insulation against mains		N/A, mains potential ⚠
	D1-GND		
	Operating action		Selectable (NO/NC)
	Contact sensing		SELV DC 6…15 V, 3…6 mA
	Parallel connection of several thermostats for one switch		Max. 20 thermostats per switch. **Do not mix with X1/X2!**
	Insulation against mains		3.75 kV, reinforced insulation
	Function input		
	External temperature sensor, changeover sensor, operating mode switchover contact, dewpoint monitor contact, enable electric heater contact, fault contact		Selectable

RDG110U

⚠ Power supply

Rated voltage	SELV AC/DC 24 V or
DC 24 V: connect G to + and G0 to -	AC AC/DC 24 V class 2 (US)
Frequency	50/60 Hz
Power consumption	Max. 2 VA/1 W
External supply line protection (EU)	Circuit breaker max. 10 A Characteristic B, C, D according to EN 60898 or Power source with current limitation of max. 10 A

No internal fuse.
External preliminary protection with max. C 10 A circuit breaker required in all cases.

Outputs

Fan control Q1, Q2, Q3-G0	AC 24 V
Rating min, max resistive (inductive)	AC 5 mA…5(4) A

STOP Note!

Fans must NOT be connected in parallel!

Connect one fan directly, for additional fans, one relay for each speed.

Control outputs

Y11-G0/Y21-G0 (NO)	RDG110U	AC 24 V, AC 5 mA…5(3) A

No internal fuse.
External preliminary protection with max. C 10 A circuit breaker in the supply line required under all circumstances.

Inputs

Multifunctional inputs	
X1-M/X2-M	
Temperature sensor input	
Type	NTC (3 kΩ at 25 °C(77 °F))
Temperature range	0...49 °C (32…120°F)
Cable length	Max. 80 m (262 feet)
Digital input	
Operating action	Selectable (NO/NC)
Contact sensing	DC 0…5 V, max. 5 mA
Parallel connection of several thermostats for one switch	Max. 20 thermostats per switch. **Do not mix with D1!**
Insulation against mains	N/A, mains potential ⚠
D1-GND	
Operating action	Selectable (NO/NC)
Contact sensing	SELV DC 6…15 V, 3…6 mA
Parallel connection of several thermostats for one switch	Max. 20 thermostats per switch. **Do not mix with X1/X2!**
Function input	
External temperature sensor, changeover sensor, operating mode switchover contact, dewpoint monitor contact, enable electric heater contact, fault contact	Selectable

RDG160T..

⚠ Power supply

Rated voltage	SELV AC/DC 24 V or
DC 24 V: connect G to + and G0 to -	AC/DC 24 V class 2 (US)
Frequency	50/60 Hz
Power consumption	Max. 2 VA/1 W
External supply line protection (EU)	Circuit breaker max. 10 A Characteristic B, C, D according to EN 60898 or Power source with current limitation of max. 10 A

No internal fuse.
External preliminary protection in G-G0 lines with max C 10 A circuit breaker required in all cases.

Outputs

Q1/Q2/Q3/L - N (relay)	RDG160T	AC 24...230 V
Q1/Q2/Q3/C – G0 (relay)	RDG160TU	AC 24 V class 2 (U.S.)

Use for 3-speed fan control

Rating min, max resistive (inductive)	5 mA...5(4) A

STOP Note!

Fans must NOT be connected in parallel!
Connect one fan directly, for additional fans, one relay for each speed.

Use for actuator control (Q1, Q2)

Q1 - rating min, max resistive/inductive	5 mA...1 A
Q2 - rating min, max resistive (inductive)	5 mA...5(4) A
Max total load current Q1+Q2(+Q3)	5 A

Use for external equipment (Q1, Q2, Q3)

Rating min, max resistive/inductive Qx	5 mA...1 A
Max total load current Q1+Q2+Q3	2 A

No internal fuse.
External preliminary protection in L line with max C 10 A circuit breakers required in all cases.

ECM fan control Y50 - G0	SELV DC 0...10 V, Max. ±5 mA
Actuator control Y10 - G0/Y20 - G0 (G)	SELV DC 0...10 V, Max. ±1 mA

Inputs

Multifunctional inputs	
X1-M/X2-M	
Temperature sensor input	
Type	NTC (3 kΩ at 25 °C (77 °F))
Temperature range	0...49 °C (32…120°F)
Cable length	Max. 80 m (262 feet)
Digital input	
Operating action	Selectable (NO/NC)
Contact sensing	DC 0…5 V, max. 5 mA
Parallel connection of several thermostats for one switch	Max. 20 thermostats per switch
D1-GND	
Operating action	Selectable (NO/NC)
Contact sensing	DC 6…15 V, 3…6 mA
Parallel connection of several thermostats for one switch	Max. 20 thermostats per switch
Function of inputs	Selectable
External room temperature sensor, heating/cooling changeover sensor, operating mode switchover contact, dewpoint monitor contact, enable electric heater contact, fault contact, monitoring input, supply air temperature	X1: P38 X2: P40 D1: P42

Operational data, all types	Switching differential, adjustable		
	Heating mode	(P30)	2 K (0.5…6 K) 4 °F (1...12 °F)
	Cooling mode	(P31)	1 K (0.5…6 K) 2 °F (1...12 °F)
	Setpoint setting and setpoint range		
	Comfort mode	(P08)	21 °C (5…40 °C) 70 °F (41...104 °F)
	Economy mode	(P11-P12)	15 °C (59 °F)/30 °C (86 °F) (OFF, 5...40 °C (41...104 °F)
	Protection	(P65-P66)	8 °C (46 °F)/OFF OFF, 5...40 °C (41...104 °F)
	Multifunctional inputs X1/X2/D1		Selectable
	Input X1		Ext. temperature sensor (P38=1)
	Input X2		Changeover sensor (P40=2)
	Input D1		Operating mode switchover (P42=3)
	Built-in room temperature sensor		
	Measuring range		0…49 °C (32…120 °F)
	Accuracy at 25 °C (77 °F)		< ± 0.5 K (± 1 °F)
	Temperature calibration range		± 3.0 K (± 6 °F)
	Settings and display resolution		
	Setpoints		0.5 °C (1 °F)
	Current temperature value displayed		0.5 °C (1 °F)
Environmental conditions	Operation		As per IEC 60721-3-3
	Climatic conditions		Class 3K5
	Temperature		0…50 °C (32…122 °F)
	Humidity		<95% r.h.
	Transport		As per IEC 60721-3-2
	Climatic conditions		Class 2K3
	Temperature		–25…65 °C (–13…149 °F)
	Humidity		<95% r.h.
	Mechanical conditions		Class 2M2
	Storage		As per IEC 60721-3-1
	Climatic conditions		Class 1K3
	Temperature		–25…65 °C (–13…149 °F)
	Humidity		<95% r.h.
Standards and directives	EU Conformity (CE)		CE1T3181xx *)
	Electronic control type		2.B (micro-disconnection on operation)
	RCM Conformity		CE1T3181en_C1 *)
	UL (RDG110U/RDG160TU)		UL 916 PAZX CSA-C22.2 No. 205 PAZX7 http://database.ul.com
	Safety class	RDG160T	II as per EN60730
		RDG160TU	III as per EN60730
	Pollution class		Normal
	Degree of protection of housing		IP30 to EN60529

Environmental Compatibility	The product environmental declaration CE1E3181*) and CE1E3181_1*) contains data on environmentally compatible product design and assessments (RoHS compliance, materials composition, packaging, environmental benefit, disposal).

General	Connection terminals	Solid wires or prepared stranded wires 1 x 0.4…2.5 mm^2 (14 gauge) or 2 x 0.4…1.5 mm^2 (16 gauge)
	Note: For sensors on inputs X1, X2, or D1, the cable length is max. 80 m (262 feet).	
	Wiring cross section on L, N, Q1, Q2, Q3, Y1, Y2, Y3, Y4, Y11, Y21	Min. 1.5 mm^2 (16 gauge)
	Housing front color	RAL 9003 white
	Weight RDG100../RDG110..	0.30 kg
	RDG160T..	0.32 kg

*) The documents can be downloaded from http://siemens.com/bt/download.

Connection terminals

RDG100,
RDG100T,
RDG100T/H

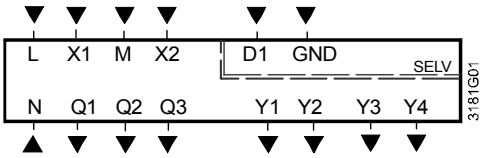

RDG110

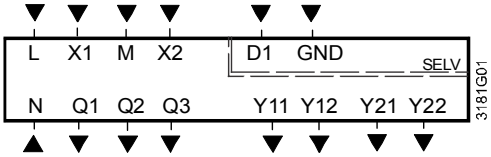

RDG110U

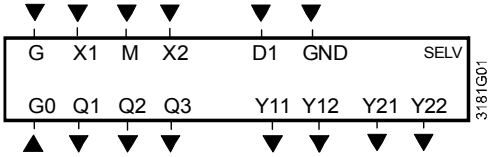

RDG160T

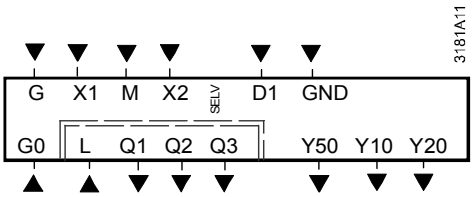

RDG160TU

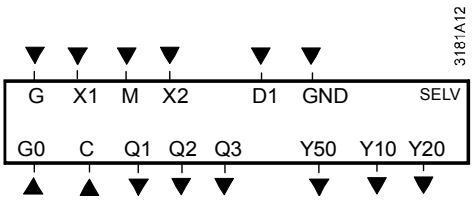

L, N	Operating voltage AC 230 V
G, G0	Operating voltage AC/DC 24 V **Note: For DC 24 V**: G0 = –; G = +
X1, X2	Multifunctional input for temperature sensor (e.g. QAH11.1) or potential-free switch Factory setting : - X1 = external room temperature sensor - X2 = sensor or switch for heating/cooling changeover Change of setting: Parameters P38, P40
M	Measuring neutral for sensor and switch
D1, GND	Multifunctional input for potential-free switch. Factory setting: Operating mode switchover contact Change of setting: Parameter P42
Q1	Control output fan speed "low"
Q2	Control output fan speed "medium"
Q3	Control output fan speed "high"
Y1…Y4	Control output "Valve" AC 230 V (NO, for normally open valves), output for electric heater via external relay
Y11, Y21	Control output "Valve" AC 230 V for RDG110 Control output "Valve" AC 24 V for RDG110U (NO, for normally open valves), output for compressor or electric heater
Y12, Y22	Control output "Valve" AC 230 V for RDG110 Control output "Valve" AC 24 V for RDG110U (NC, for normally closed valves)

G, G0	Operating voltage AC/DC 24 V **Note: For DC 24 V**: G0 = –; G = +
L (-N)	Power supply relay output Q1…3 AC 24…230 V for RDG160T
Y10, Y20	Control output for DC 0…10 V actuator
Y50	Control output "Fan" DC 0...10 V
Q1…3	Control output fan, valve, el. heater or ex. equipment
C (-G0)	Power supply relay output Q1…3 AC 24 V for RDG160TU

RDG100..

Application

1-speed or 3-speed fan

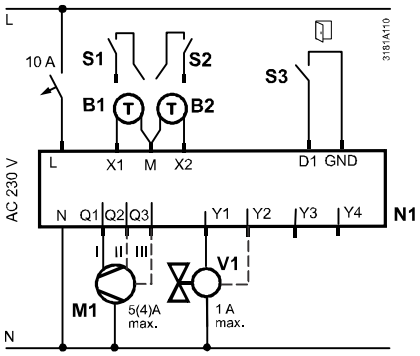

	V1 ⬇	V2 ⬇
• 2-pipe	YHC	
• 2-pipe & radiator	YHC	YR
• 4-pipe	YH	YC
• 2-stage	YHC1	YHC2
• 2-pipe & el. heater	YHC	YE
• 4-pipe & el. heater	YH	YC
	YE	

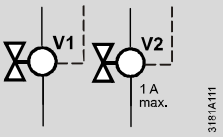

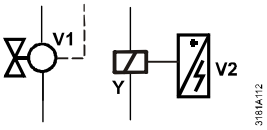

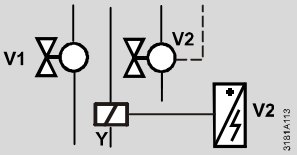

N1	Room thermostat RDG100..
M1	1-speed or 3-speed fan
V	Valve actuators: On/Off, heating, cooling, radiator, heating/cooling, 1st or 2nd stage
S1, S2	Switch (keycard, window contact, etc.)
S3	Switch at SELV input (keycard, window contact)
B1, B2	Temperature sensor (return air temperature, external room temperature, changeover sensor, floor temperature limit, etc.)
Q	Relay outputs
Y1...Y4	Triac outputs
YH	Heating valve actuator
YC	Cooling valve actuator
YHC	Heating/cooling valve actuator
YR	Radiator valve actuator
YE	Electric heater with relay/contactor Y
YHC1/YHC2	1st/2nd stage

RDG110

Application

1-speed or 3-speed fan

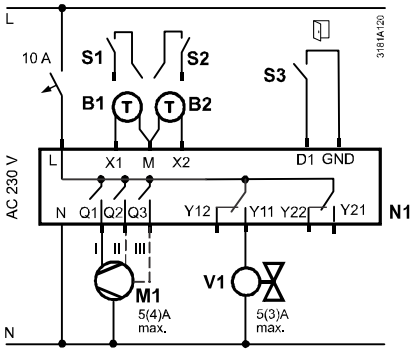

	V1	V2
• 2-pipe	YHC	
• 2-pipe & radiator	YHC	YR
• 4-pipe	YH	YC
• 2-stage	YHC1	YHC2
• 2-pipe & el. heater	YHC	YE
• 1 and 2-stage compressor	C1	C2
• Compressor & el. heater	C1	YE
• Compressor & reversing valve	RV	C1

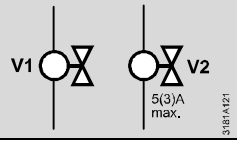

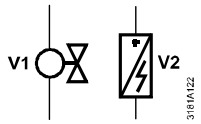

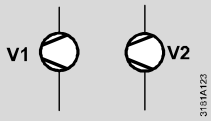

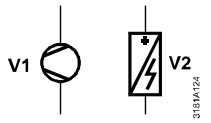

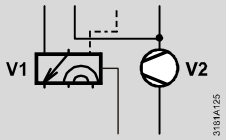

N1	Room thermostat RDG110
M1	1-speed or 3-speed fan
V	Valve actuators: On/Off, heating, cooling, radiator, heating/cooling, 1st or 2nd stage
S1, S2	Switch (keycard, window contact, etc.)
S3	Switch at SELV input (keycard, window contact)
B1, B2	Temperature sensor (return air temperature, external room temperature, changeover sensor, floor temperature limit, etc.)
Q	Relay outputs
Y11…Y22	Relay outputs
YH	Heating valve actuator
YC	Cooling valve actuator
YHC	Heating/cooling valve actuator
YR	Radiator valve actuator
YE	Electric heater max. 5 A
YHC1/YHC2	1st/2nd stage
C1/C2	Compressor 1st and 2nd stage
RV	Reversing valve

RDG110U

1-speed or 3-speed fan

Application

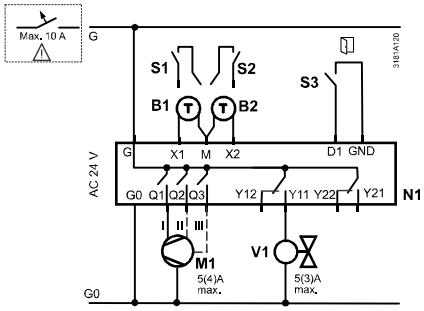

	V1	V2
• 2-pipe	YHC	
• 2-pipe & radiator • 4-pipe • 2-stage	YHC YH YHC1	YR YC YHC2
• 2-pipe & el. heater	YHC	YE
• 1 and 2-stage compressor	C1	C2
• Compressor & el. heater	C1	YE
• Compressor & reversing valve	RV	C1

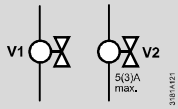

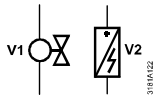

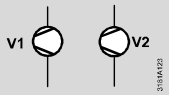

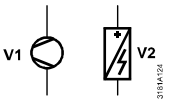

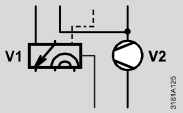

N1	Room thermostat RDG110U
M1	1-speed or 3-speed fan
V	Valve actuators: On/Off or PWM, 3-position, heating, cooling, radiator, heating/cooling, 1st or 2nd stage
S1, S2	Switch (keycard, window contact, etc.)
S3	Switch at SELV input (keycard, window contact)
B1, B2	Temperature sensor (return air temperature, external room temperature, changeover sensor, floor temperature limit, etc.)
Q	Relay outputs
Y11…Y22	Relay outputs
YH	Heating valve actuator
YC	Cooling valve actuator
YHC	Heating/cooling valve actuator
YR	Radiator valve actuator
YE	Electric heater max. 5 A
YHC1/YHC2	1st/2nd stage
RV	Reversing valve
C1, C2	Compressor 1st/2nd stage

⚠ For US installations, use Class 2 rated power supplies.
For other installations, use circuit breakers with rated current of no more than 10 A.

RDG160T

DC 0...10 V fan

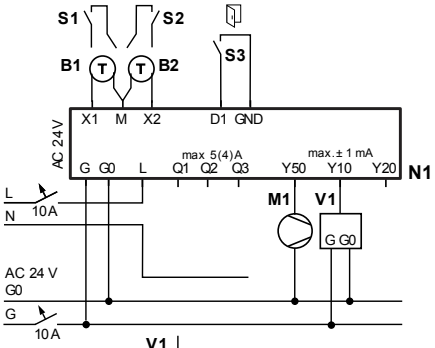

1-speed/3-speed fan

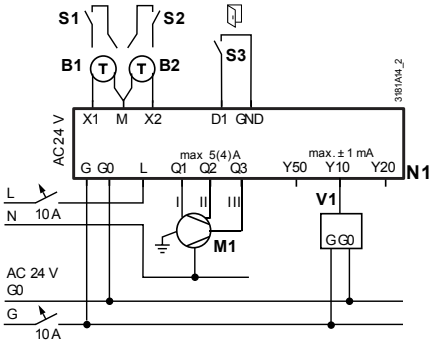

Application	V1 ↓	V2 ↓
• 2-pipe	YHC	
• 2-pipe and radiator	YHC	YR
• 4-pipe	YH	YC
• 2-stage	YHC1	YHC2
• 2-pipe and electric heater	YHC	YE
• Compressor 1-stage	C1	
• Compressor 2-stage	C1	C2

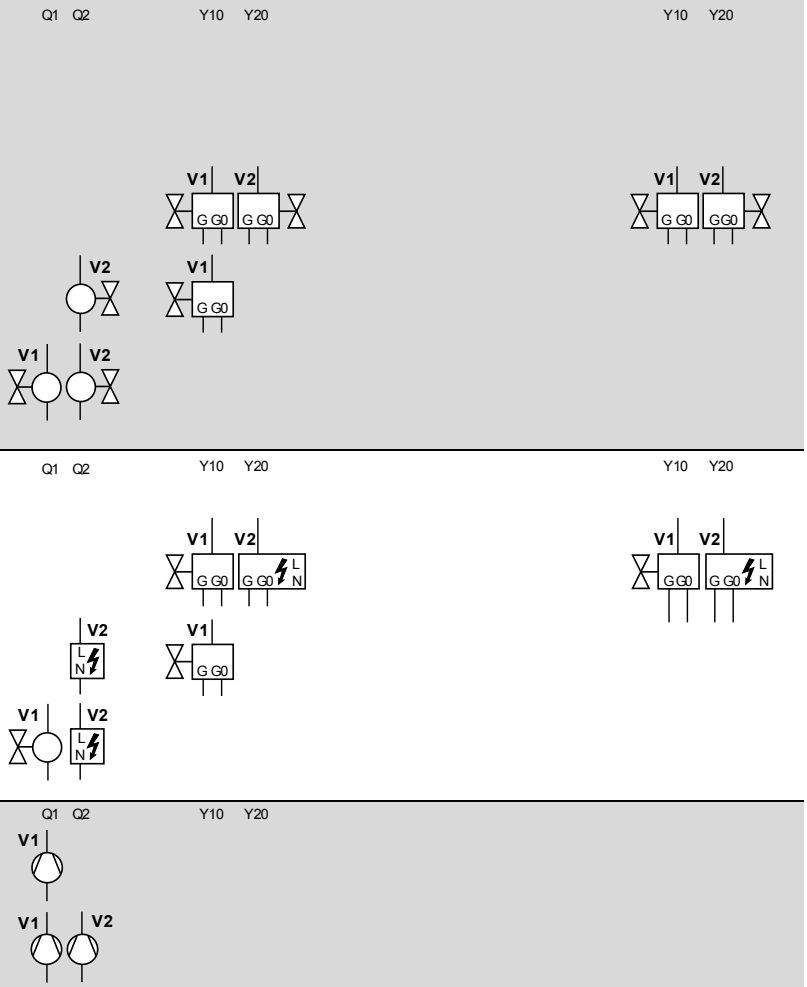

N1	Room thermostat RDG160T	M1	1-speed or 3-speed fan, DC 0...10 V fan
S1...S3	Switch (keycard, window contact, presence detector, etc.)	V1, V2	Valve actuators: On/Off, DC 0...10 V, heating, cooling, radiator, 1st or 2nd stage
B1, B2	Temperature sensor (return air temperature, external room temperature, changeover sensor, etc.)	YH	Heating valve actuator
		YC	Cooling valve actuator
		YHC	Heating/cooling valve actuator
YE	Electric heater max. 5 A	YHC1/YHC2	1st/2nd stage
C1, C2	Compressor 1st/2nd stage	YR	Radiator valve actuator

RDG160TU

DC 0...10 V fan **1-speed/3-speed fan**

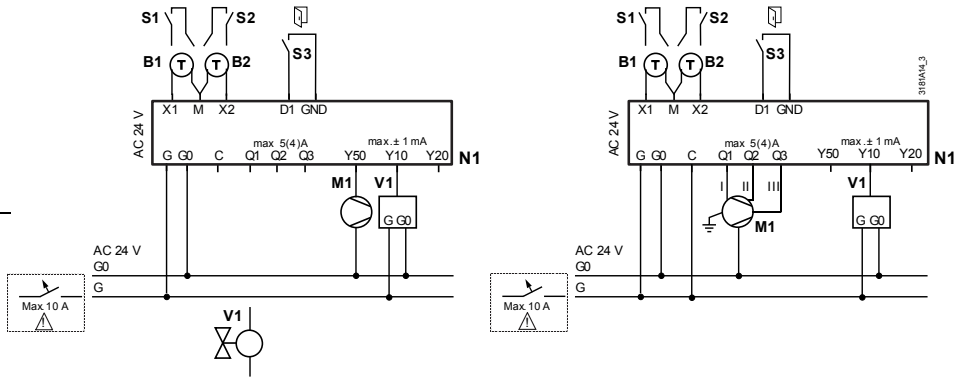

Application	V1 ⬇	V2 ⬇
• 2-pipe	YHC	
• 2-pipe and radiator	YHC	YR
• 4-pipe	YH	YC
• 2-stage	YHC1	YHC2
• 2-pipe and electric heater	YHC	YE
• Compressor 1-stage	YHC1	
• Compressor 2-stage	YHC1	YHC2

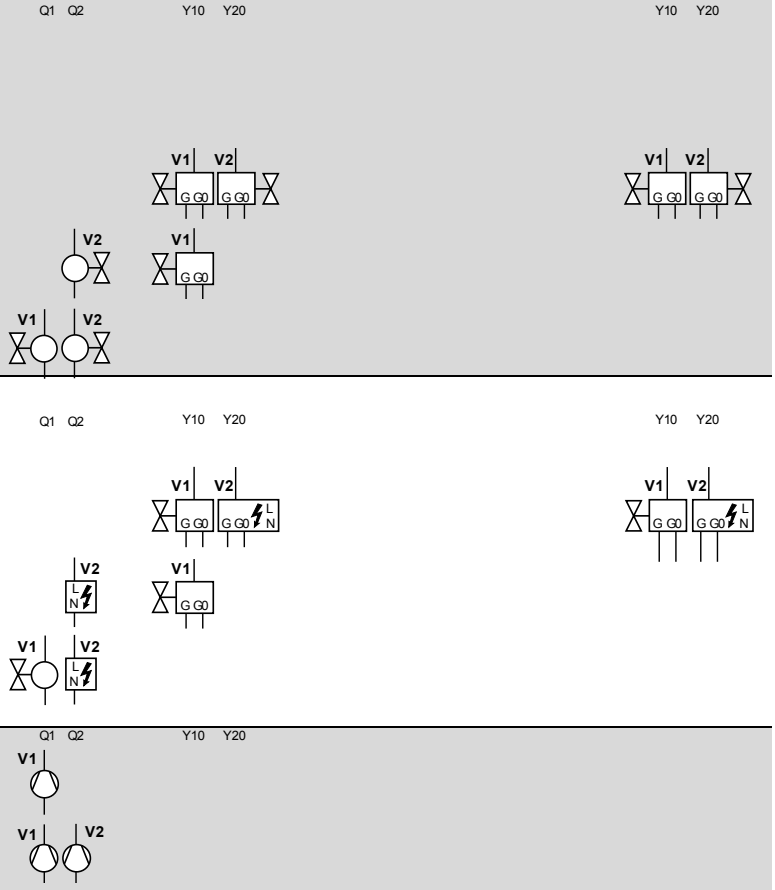

N1	Room thermostat RDG160TU		M1	1-speed or 3-speed fan, DC 0...10 V fan
S1...S3	Switch (keycard, window contact, presence detector, etc.)		V1, V2	Valve actuators: On/Off, DC 0...10 V, heating, cooling, radiator, 1st or 2nd stage
B1, B2	Temperature sensor (return air temperature, external room temperature, changeover sensor, etc.)		YH	Heating valve actuator
			YC	Cooling valve actuator
YR	Radiator valve actuator		YHC	Heating/cooling valve actuator
YE	Electric heater max. 5 A		YHC1/YHC2	1st/2nd stage

⚠ For US installations, use Class 2 rated power supplies.
For other installations, use circuit breakers with rated current of no more than 10 A.

Dimensions

RDG1..

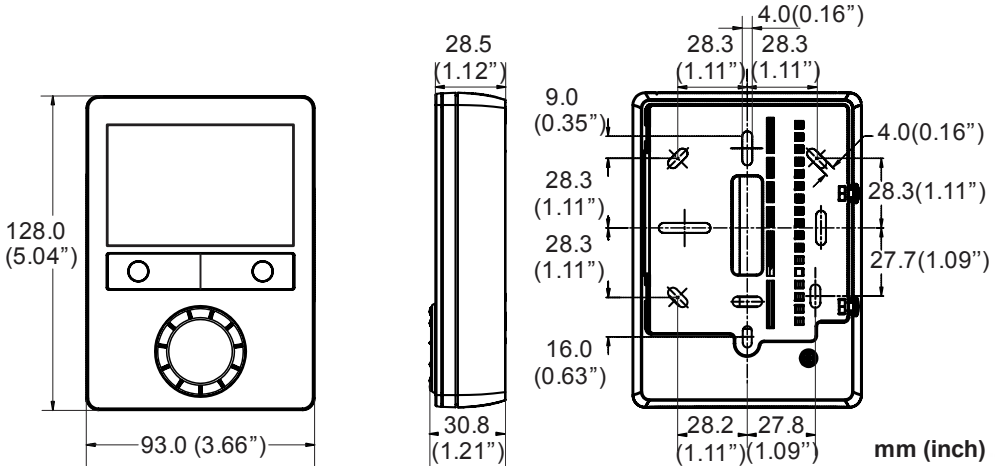

RDG100T/H